In 2014, we worked together on the pile head tensile test of DH quick piles.

Lee Shengnan / Deputy General Manager of Dehan Intellectual Technology Co., Ltd.

Date : 2018-08-11

Note: The readers should know that most content of this paper was tranlated by software. And the tradiational chinese version is original.

Foreword

In this case, the DH quick pile head pull-out test is the first test in the world.

In the field of foundation piles, PC/PHC piles are indeed piles with a fairly high C/P value. It is not to say that PC/PHC piles are the best, not the omnipotent and versatile piles, but the conclusions drawn from the comprehensive measurement of the nature, performance, cost and other factors of each pile. Each type of foundation pile also has special applications, such as the applicable alluvial soil layer/gravel layer/rock formation, applicable plain/hill slope/riverside/seashore/sea, applicable building type/construction life/durability/quality/strength requirements, applicable depth, applicable time requirements, and even the applicable funds (in fact, this is the most important), have different considerations, and there are different selection criteria, can not be forced. But undoubtedly, PC/PHC piles are one of the most excellent pile options.

In the early years, the diameter of PC piles was mostly Φ300~400mm. The main reason was that the pile prefabricated capacity/energy was small in the early years, such as the weaving machine, the crane, the pre-tensioning machine, the rolling table, the steaming furnace, etc. It should be one of the options under economic underdevelopment. Also, because the construction method in the early years mainly used the hammering method (commonly known as striking pile), the penetration efficiency into the soil layer of the small pile diameter pile is obviously better. As time goes by, the public's requirements for the environment are high, such as noise pollution (this is the most serious), vibration, squeezing, and neighboring disputes, or the engineer is safe on the pile head/pile crack on the pile structure. Concerns about hidden dangers, etc., have gradually developed new construction methods to overcome them, such as static pressure loading method or vibration pressing method (both of which have not developed in Taiwan), or implantable methods (the mainland China called Buried) to improve the lack of hit piles. In order to increase the bearing capacity of the pile and improve the safety of the pile, the pile diameter of PC/PHC is also getting larger and larger. At present, the Φ500～600m is the most popular in the Taiwan engineering market, and the pile diameter of Φ700～800mm is normal, and then go up. Less common. Taiwan can prefabricate up to Φ1,000mm pile diameter, while the mainland has a diameter of Φ1,400mm. The larger the pile diameter is, the larger the pile wall thickness is. The larger the protective layer for the pre-force steel rod is, the higher the water resistance/durability of the pile body is. This is the general knowledge of reinforced concrete. Not asking what university.

DH quick pile, we also called it "advanced DH prestressed concrete pile" in the early days, and

later simplified the name into DH quick pile, which is mainly simple and easy to remember. DH is just an abbreviation of the company's English name, and it has no special meaning. The DH quick pile is actually a kind of PC/PHC pile, and the research and development is mainly based on the implant pile type.

We all know that PC/PHC piles are prefabricated piles, and the main 3-disadvantages are the upper, middle and lower ends. In the development of the DH quick pile, the starting point of the improvement was initiated from the "improving the weakness of the pile head treatment of the PC/PHC pile", which is the improvement of the upper end of PC/PHC pile. This is because the main developers are engaged in the petrochemical industry construction, from the step-by-step construction process of the piling, and discovery the disvertage [1]. The field of vision is still on the structural mechanics weakness improvement, mainly in the pile head resistance on the pulling force.

However, with more research and more careful calculations, the best verification method still needs to be demonstrated by "testing". We started preparing for the test in 2012-2013, and we were unable to get assistance after consulting some southern university civil engineering departments. We think about it, probably because the school campus has limited land and cannot provide the engineering space as large as the piling. The piles are quite large, and the implantation and removal work is quite large, which is not easily accepted by the school.

Fortunately, we got the assistance of the Department of Civil Engineering of Kao Yuan University. Under the introduction of Professor Chang Jiaqi and Professor Liu Wenzong, the school also encouraged the development of innovative technologies, especially in the civil engineering department. A small piece of land beside the school wall next to the pavilion serves as our place of study and experimentation. It is a project of industry-university cooperation, on the other hand, as a civil engineering student's engineering observation and engineering entity furnishings (pile structural parts are generally hidden underground, students cannot contact for learning) to increase students' practical experience and teaching requirement. Later, we used these implanted piles to further test of other technologies (such as E1 washing technology for electric insolation). Originally, W1 sponge city and P5/P6 technology were arranged, but they were later delayed by the vulgar things. In the end, we donated all the crops to the school as a teaching resource. Possibly, in the campuses of all universities in Taiwan, there should be no items in the piles of real works, except for Kao Yuan University.

These samples should still exist in the civil engineering building of Kao Yuan University (the life of the pile can reach 50-100 years). The engineer who are interested in research can go to the school to visit, and maybe you can develop better and newer. Engineering technology, as an engineer, we are optimistic.

At that time, we had a lot of ideals and concepts for the DH quick pile, but many of the details were not understood. Now, the DH quick pile has matured and is gradually being used in various projects. Now I want to write the DH quick piles in the process of enlightenment, conception,

design, trial production, planting, trial pulling, etc., and write them in words so that the follow-up engineers can understand, in terms of application or innovation.

1. The production of piles for DH quick piles

During this period (~2014), the DH quick pile has not yet developed, so only the trial piece.

The development principle of the DH quick pile is actually quite simple, because the main focus has been firmly verified in the development of the engineering industry's predecessors for decades. The main purposes of the trial work of this case are:

(1) Examine several R&D points and whether there are any problems in the production of the pile factory, which will be prepared for mass production in the future. For example, the lower stop-plate, the upper cover-plate, the preset pile head horizontal reinforcements (the 1st/2nd generations have some differences), and the venting (the 1st and 2nd generation are very different, and the difference is greater after the 3rd generation). Inspect the implementation situation of the production team of the pile factory and the necessary encounter problems, such as the assembly of the horizontal reinforcements of the pile head and the setting of the lower stop-plate. In addition to the prefabrication of the pile factory, the production of piles, steel-form, cranes, rolling tables, pre-force machines, steaming furnaces, etc., are numerous and difficult.

(2) Review the preparation conditions (prefabricated and supplied) of various types of pile heads, such as stop-plates, cover-plates, and ventilation sets.

(3) Examine the assembly of pile head parts in the production of the pile factory.

(4) Inspection The pre-judgment of the newly developed hollow pile head in the future construction site (piling).

(5) Predicting future improvements. And through many trials to improve the lack of DH piles, we do.

(6) Predicting joint improvement points in the future with other technologies. (Note: DH quick pile is only the first stage technology of our company's P-series technology, and can be further combined with other technologies)

It is one of the biggest gains of this case to consolidate DH quick pile technology through implementation (trial) and test, and to reduce errors and reduce the cost of heavy work in future batch implementation.

1.1 The 1st generation product of DH quick piles

The 1st generation of piles of DH quick piles was commissioned about 2011. The piles are mainly 2-Φ500mmX12ML type-C PHC piles, including DH pile heads.

Part of the 1st generation of the test sample, see Fig. 1-1-1. The actual assembly of the pile head is shown in Fig. 1-1-2. The case of DH pile horizontal reinforcement embedded in the pile wall

concrete after hardening is shown in Fig. 1-1-3. DH pile head vent, see Fig. 1-1-4.

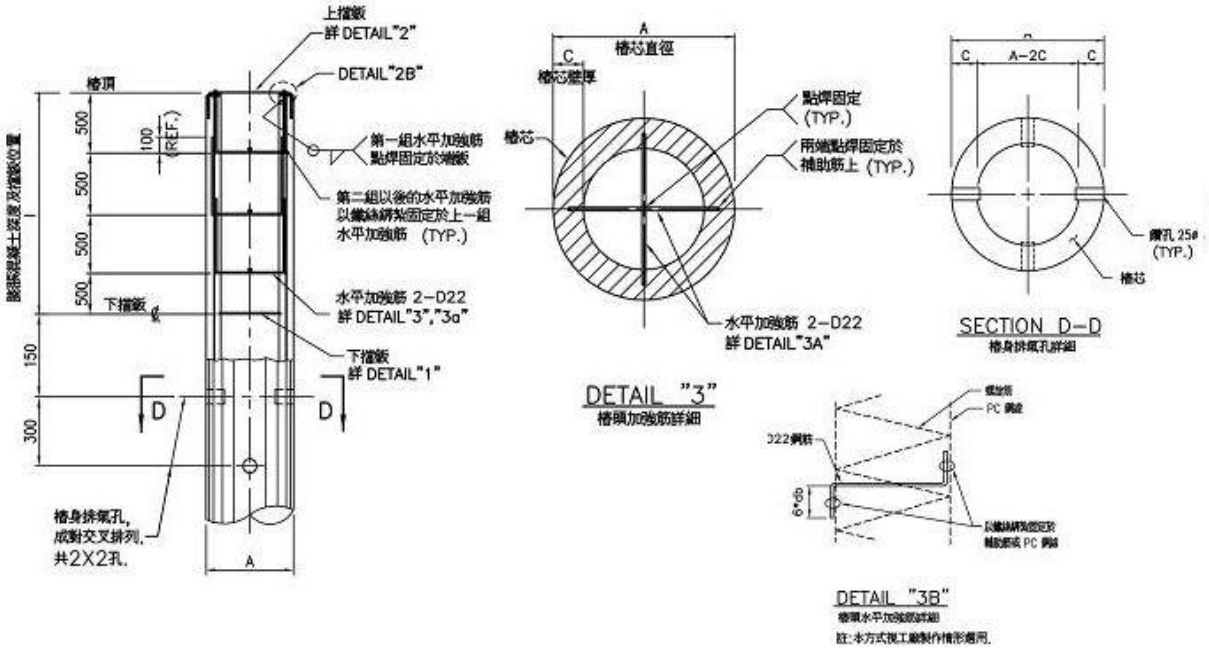

▲Fig. 1-1-1: The 1st generation of the test piece - DH pile head part pattern

▲Fig. 1-1-2: The 1st generation of test pieces - DH pile head horizontal reinforcements

▲Fig. 1-1-3: The 1st generation of test pieces - DH pile head horizontal reinforcement are firmly embedded into the pile wall after concrete casting

▲Fig. 1-1-4: The 1st generation test piece - DH pile head vent hole of Φ25mm

The 1st generation of products modified the S-hook pattern of the 0th generation pile (only paper work), and applied the mode of the preset pile head horizontal reinforcement for the first time. This is a relatively common and easy-to-assemble form of steel bars. The main form of the pile horizontal reinforcements in this period is the"U-shaped" with hooks at both ends (U-shaped: flat reinforcemtn and two heads with the same direction hooks, or Z-shaped : flat reinforcement with reverse hooks), presets embedded into the pile wall concrete. The design principle is mainly to use the 90 degree hook at the end of the reinforcement bar to improve the end point anchoring force of the horizontal reinforcements of the pile head (when the tension is applied, even when the pressure is downward), to ensure that the horizontal reinforcement can be the largest vertical when the tension is applied. Shear capacity; and provides a better level of shear energy (somewhat similar to the column's secondary stirrup type), is a fairly conservative design concept. This pile horizontal reinforcement has also become the main type of DH quick piles later, although there are still some improvements (the 2nd generation has improved, the 3rd generation has improved again).

DEHAN 德翰 智慧科技

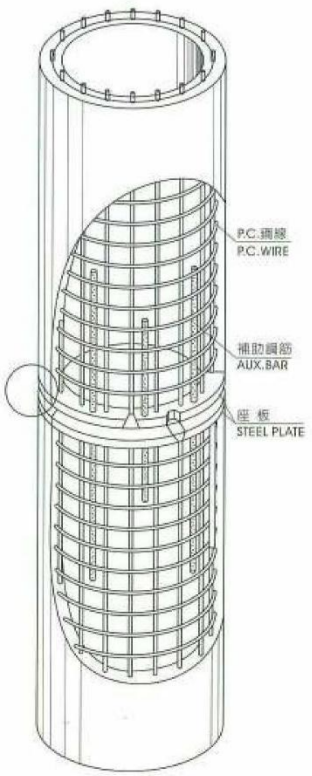

標準尺寸表 STANDARD DIMENSIONS							
Diameter 樁徑 D	Thickness 厚度 T	鋼板接頭 STEEL PLATE SPLICE			L3	間 距 PITCH 1.3	間 距 PITCH 2
		H	t	ts			
250	50				800	50	100
300	60	120	1.6	19	800	50	100
350	65	150	2.3	19	800	50	100
400	75	150	2.3	19	1000	50	100
450	80	150	2.3	19	1000	50	100
500	90	150	2.3	19	1500	50	100
600	100	150	2.3	19	1500	50	100
700	110	150	3.2	22	1500	50	100
800	120	200	3.2	25	2000	50	100
1000	140	200	4.6	25	2800	8.0	100

▲Fig. 1-1-5: Traditional pile end bar cage[2]

The lack of the 1st generation products:

(1) The shape of the horizontal reinforcement of the DH pile head is incorrect:

In the 1st generation of the product trial, we encountered a rather difficult problem. The 1st generation of the pile head horizontal reinforcement is made of "U-shaped reinforcement" (Z-type horizontal reinforcement are used in this case), that is, the two ends of the horizontal reinforcement are directly made into hooks to ensure the anchoring force of the ends of the horizontal reinforcement. In the pile factory, when the steel cages of PC/PHC piles are assembled (currently Taiwan manufacturers use automatic electric welding to form steel cages, commonly known as "bar neting", saving time and effort, and eliminating the lack of quality of artificial electric welding), often in pile heads. Use BWG as a spiral around the bundle. In the case of the 2-Φ500mm PHC type C, the screw rib at the end of the pile is BWG. Φ4.18 @50mm, and the middle part is BWG. Φ4.18@100mm, see Fig. 1-1-5. Such a spiral rib is a general case, but when using the DH quick pile, the horizontal rib of the pile head is 3-layers of 2-D22@500mm, and the Z-shaped reinforcement are provided with hooks at both ends. When the pre-strength wire mesh is laid, On the contrary, the horizontal reinforcement of the pile head cannot be fully extended and assembled, because the length of the hook (the D22 rib in this case, the length of the hook = 6*db is about 132mm) exceeds the spacing of the BWG. spiral reinforcement (@ 50 mm), so that it is necessary to manually open the spiral reinforcement, insert the horizontal reinforcement of the pile head, and then correct the spiral reinforcement.

There are two missing things: (A) manually opening the spiral reinforcement will waste cost/time; (B) when the spiral reinforcement are opened/corrected, brute force and secondary welding are sometimes used, which will affect the quality of the steel cage. These defects were corrected in the 2nd generation. This missing product in the 2nd generation has been corrected to an L-shaped (or double L-shaped) pile horizontal rib.

(2) The vent holes in side wall of the DH pile head is improper:

The design of these side wall vents is to discharge the cement slurry and the pile hole soil mixture in the pile hole and the remaining air in the pile hole to the pile in response to the characteristics of the PC/PHC pile implant method. In addition to the pile body, the floating load of the pile can be reduced (Note: the Archimedes buoyancy principle), so that the pile can rely on its own weight to smoothly sink the pile to correct elevation in soil. The wall side venting hole is disposed below the "hollow pile head" of the pile head portion (ie, below the lower stop-plate). When pile sinking, the air and cement slurry will be discharged outward from the vent holes (Φ25mm) on both sides.

This is the old design of our 1st generation. After the production, we observed that the venting hole was not effective, and it was easy to plug the hole. It may cause the pile to "sand" and cause damage. Therefore, it is discarded. This technique was later cited by us as the drainage technology of the W1 (DH-RAIN) sponge city. However, the contract pile factory is not willing to pre-embed the perforated device, and the direct drilling of the hole into the hole also makes us feel a bit uncomfortable (see Fig. 1-1-4).

We did find some missing implants (this has a new flaw in the 2nd generation), so there was no site construction at the time. In the implementation of this case (2014), based on certain factors, we also implanted the two 1st generation products together.

1.2 The 2nd generation of DH quick piles

The 2nd generation pile of DH quick pile is also commissioned about 2014, which is 5-Φ600mmX10ML type-C PHC pile, including DH design. Because this batch of samples has a variety of design purposes, it is not allowed to elaborate. (See Fig.1-2-1)

Due to the small number of samples, the manufacturer has no profit at all. Corrected the 1st generation U-type (Z-type) pile horizontal reinforcement (factory assembly difficulty), improved the L-shaped pile head horizontal rib type, directly inserted into the steel cage, easier to pre-stress steel rod and spiral cage for lashing (see Fig. 1-2-2). In Fig.1-2-3, it can be seen that the horizontal reinforcement of the pile head after concrete casting hardening are embedded in the pile wall. In Fig.1-2-4, it can be seen that the pile head venting parts of the DH quick pile are assembled.

However, this L-shaped horizontal rib still has a little missing in the small-sized pile. Later in the technical briefing of Dec 2015, it was picked out by the chief engineer of the Water Conservancy Bureau of Kaohsiung City Government. This also prompted the 3rd generation improvement of the DH quick pile (2016); however, the L-shaped horizontal rib style, due to better end anchoring, we still retain the application of large-size piles.

The 1st generation piles was prefabricated as early as 2011 and has been placed in the factory. The 2nd generation pile was prefabricated in Jan 2014. Careful friends, you can see the difference between the two generations of products from historical photos.

More importantly, the 2nd generation of piles used the pile head vent pipe for the first time. A 2" vent pipe is used when pile diameter is Φ450mm or less, and a 3" vent pipe (most commonly used) is used for the pile diameter Φ500mm or more. The above-mentioned venting method has higher venting efficiency for the piling construction in site, and the possibility of plugging the pipe during the piling is greatly reduced, overcoming the lack of the wall-side vent of the previous generation.

The general design details of the steel bars (improvements in mechanics) have matured in the 2nd generation, and the subsequent modifications are limited. However, the vent pipe section (which is more relevant to the construction) will be delayed until the 3rd and 3.5th generations.

第二代 DH-PHC 植入式基樁 主要構造(工廠預製)

- 第二代 DH-PHC 植入式基樁藉由新研發的中空樁頭技術，在中空樁頭中預置水平筋。
- 樁頭水平筋與樁壁混凝土的結合，可將來自樁頭的軸向拉(壓)力由水平筋傳遞至樁壁體。其力量傳遞效果遠勝於傳統 PHC 樁藉由膨脹混凝土的摩擦力傳遞，且不會有老化鬆脫問題。

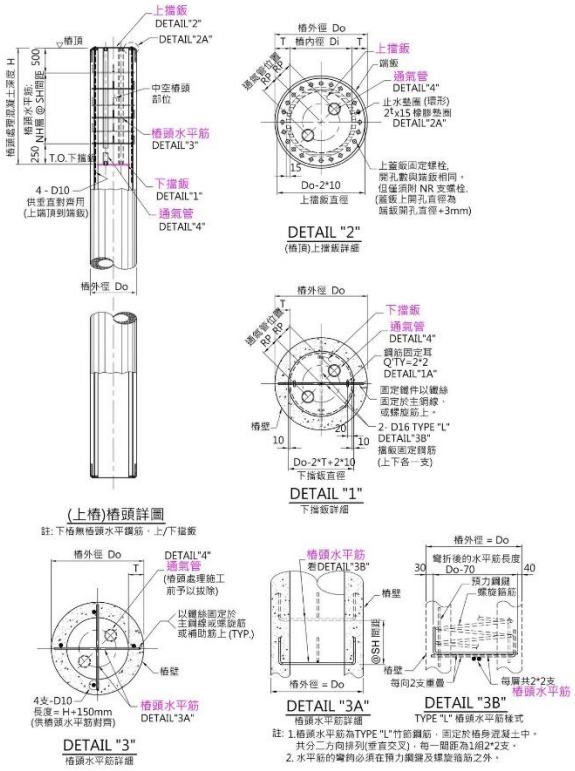

第二代 DH-PHC 植入式基樁的樁頭處理(工地)

- 第二代 DH-PHC 植入式基樁的上蓋板可迅速以小型的氣動(電動)工具予以打開，隨即露出樁頭中空部份及預置的樁頭水平筋，即可立刻置入錨錠鋼筋、及後續混凝土澆置。
- 樁頭中空部份的設計，在工地樁頭處理上可節省使用大型機具二次鑽孔及人工清理所耗費的時間成本與人工作業成本。乾淨的中空樁部樁壁可使樁頭處理的可靠度遠超過傳統 PHC，樁芯澆置混凝土不會受到殘留泥土的污染。

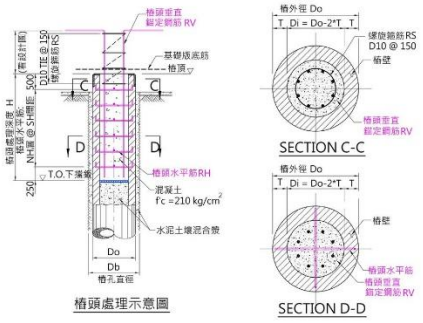

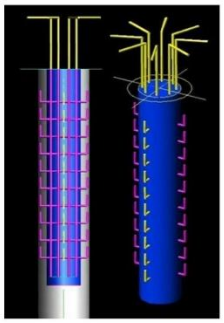

←DH-PHC 基樁的樁頭處理成果示意圖

- 藉由工廠預置的樁頭水平筋(錨定在樁壁混凝土中)、及工地灌注的混凝土，形成的穩定結構，可充份將上方承台的力量傳遞到樁壁體。(如右側圖，完成後，樁頭水平筋將嵌入樁壁混凝土中)
- 樁頭處理，在灌注樁頭混凝後，成為完整的鋼筋混凝土結構，耐久性佳。
- 樁頭：永不鬆脫。

第二代 DH-PHC 基樁 工廠實際製作

樁頭鋼筋組立情形：

每層 2X2 支 type "L"水平筋 (相疊交叉)

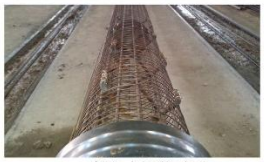

每層 2 支水平筋 (交叉)

DH-PHC 基樁之中空樁頭
水平筋完成情形：(工廠預製)

Φ600 基樁實作照片，水平筋為#6 鋼筋 (每層 2X2 支相疊交叉)。
及 樁頭 PVC 管安裝。(第二代 DH-PHC 樁)

Φ500 基樁實作照片，
水平筋為#7 鋼筋 (每層 2 支交叉)。

說明：
DH-PHC 仍可應用在錘擊式、壓入式基樁中；
但樁頭無需設置 PVC 通氣管及上蓋鈑。

第二代DH-PHC植入式基樁 樁頭水平筋之剪力承載量

樁頭水平鋼筋			鋼筋強度		水平筋之 容許剪力傳遞 (傳遞樁之軸向拉力或壓力)				
號數 #	直徑 dia.	單支 斷面積 As_1	降伏強度 fy	剪力強度 fv =0.85*fy	每1支鋼筋(2端點) V_1= $(2*As_1)*fv$	3層 * 2x2 支 12*V1	4層 * 2x2 支 16*V1	5層 * 2x2 支 20*V1	6層 * 2x2 支 24*V1
	(mm)	(cm^2)	(kg/cm^2)	(kg/cm^2)	(ton)	(ton)	(ton)	(ton)	(ton)
#4	D13	1.33	2,800	2,380	6.32	76	101	126	152
#5	D16	2.01	2,800	2,380	9.57	115	153	191	230
#6	D19	2.84	4,200	3,570	20.24	243	324	405	486
#7	D22	3.80	4,200	3,570	27.14	326	434	543	651
#8	D25	4.91	4,200	3,570	35.05	421	561	701	841

說明：
1 竹節鋼筋之容許剪力強度採用USD法，為 fv=Φ*fy (Φ取0.85)。
2 每1層水平筋為2*2支Type "L"鋼筋交叉，錨定於樁壁混凝土中。
(實務上以每層2*2支Type "L"水平筋相疊，最易施工組立，並獲取最大承載力)
若每1層水平筋為2支Type "L"鋼筋交叉，則上表容許力量減半。
3 基樁樁頭處理大約1.5～2m深，樁頭水平筋建議為 4～6 層佈置，間距約200～500mm。
4 建議樁頭水平筋在小口徑樁使用 D16筋，大口樁用 D19或D22筋。
5 設計者可依樁之承載力量(拉力或壓力樁)決定樁頭水平筋之直徑、支數、間距。

各式口徑DH-PHC植入式基樁 建議樁頭水平筋設計量

基樁	樁頭處理: 樁頭水平鋼筋					樁頭處理: 垂直錨定鋼筋			
外徑 Od	水平筋支數 Nh	直徑 $d_{b,h}$	鋼筋 降伏強度 $f_{y,h}$	水平筋 容許剪力 Ha		鋼筋數 Nv	直徑 $d_{b,v}$	鋼筋 降伏強度 $f_{y,v}$	垂直筋 容許拉力 Ta
(mm)	(支)	(mm)	(kg/cm^2)	(ton)		(支)	(mm)	(kg/cm^2)	(ton)
500 Φ	6層*2x2支 type "L"	D16	2,800	230		8	D19	4,200	95
600 Φ	6層*2x2支 type "L"	D16	2,800	230		8	D19	4,200	95
700 Φ	6層*2x2支 type "L"	D16	2,800	230		12	D22	4,200	192
800 Φ	6層*2x2支 type "L"	D19	4,200	486		12	D22	4,200	192
900 Φ	6層*2x2支 type "L"	D19	4,200	486		16	D25	4,200	330
1000 Φ	6層*2x2支 type "L"	D22	4,200	651		16	D25	4,200	330

說明：
1 樁頭水平筋之容許剪力強度採用USD法，為 fv=Φ*fy (Φ取0.85)。
總容許剪力 Ha = $(Nh*2端)*As_1*(Φ*fy)$
每1層水平筋為2*2支Type "L"鋼筋交叉，錨定於樁壁混凝土中。
(實務上以每層2*2支Type "L"水平筋相疊，最易施工組立，並獲取最大承載力)
若每1層水平筋為2支Type "L"鋼筋交叉，則上表容許力量減半。
樁頭處理約1.5～2m深，樁頭水平筋建議為 4～6層佈置，間距約200～500mm。
2 樁頭處理之垂直錨定鋼筋之容許拉力強度採用USD法，為 ft=Φ*fy (Φ取1.0)。
總容許拉力 Ta = $(Nv*As_1)*(Φ*fy)$
3 設計者可依樁之承載力量自行決定樁頭水平筋、垂直錨定鋼筋數量。

第二代DH-PHC基樁與傳統基樁 植入式施工比較

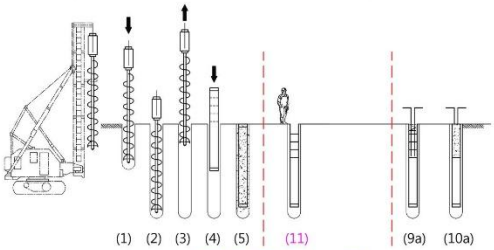

DH-PHC基樁施工方式

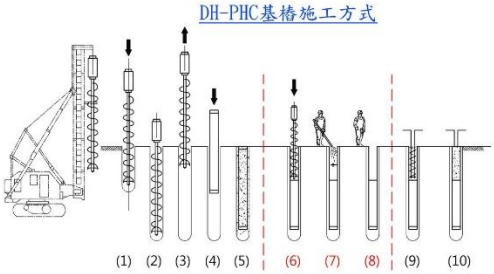

傳統PHC基樁施工方式

DH-PHC基樁施工方式:

(1)：以大型機具螺桿鑽孔
(2)：排出土壤鑽至設計深度
(3)：拔出鑽桿
(4)：補入水泥砂漿,並植入PHC樁
(5)：將PHC樁植入至設計深度,並養護

(11)：以氣動工具迅速移除上蓋板/PVC管，中空樁頭及預置鋼筋立即露出。(不使用大型機具施作及擾動) 通常只需植樁後24小時即可施作。
(9a)：將錨錠鋼筋插入樁頭部位。
(10a)：澆灌混凝土，並養護。

傳統PHC基樁施工方式:

(1)：以大型機具螺桿鑽孔
(2)：排出土壤鑽至設計深度
(3)：拔出鑽桿
(4)：補入水泥砂漿,並植入PHC樁
(5)：將PHC樁植入至設計深度,並養護

(6)：以大型機具螺桿在樁頂部鑽孔。(有些業主會要求28天才許可鑽孔)
(7)：排出土壤鑽至樁頭處理深度，人工清理(高壓水沖洗)樁體內壁。
(8)：樁頭餘水清理。
(9)：將錨錠鋼筋置入樁頭部位。
(10)：澆灌膨脹混凝土，並養護。

第二代 DH-PHC 植入式預力基樁

近二十年來，基樁工程界最創新的產品。幾乎不改變傳統基樁外形，但突破傳統的基樁製造與施工方法的結合，讓 PHC 基樁發揮最大的效益。

藉由最新發展的中空樁頭工法，DH-PHC 植入式基樁將大量於工地施作的樁頭處理工作，移入基樁工廠內作業。讓工廠製作的強度、精度、穩定度能夠充份發揮，取代工地施工的不確定性、天候影響及品質疑慮，使整體工程經費降低、縮短工期、結構安全度提高、結構設計者的理念更能完整落實。

第二代 DH-PHC 植入式基樁與傳統 PHC 基樁　工作項目比較：

工作項目	第二代 DH-PHC 植入式基樁	傳統 PHC 基樁
1.植樁後工地挖掘中空樁頭	• 輕易以小型氣動工具或電動工具迅速鬆開上蓋板，即可進行後續施工。 • 少用人工，無廢土問題，工地現場相當乾淨。 • 節省施工時間及施工成本。	➢ 須使用大型機具鑽掘及人工作業。 ➢ 佔用大量工作面積，增工安考慮。 ➢ 大型機具施工輾壓會影響植入樁週邊水泥漿養護強度。 ➢ 鑽掘出的廢土須再加以處理或運棄，工地現場也須二次清理污泥土。
2.中空樁頭內壁面清理作業	• 無需 (工廠出廠時已處理乾淨) • 節省施工時間及施工成本。	➢ 視現場作業工班素質而定。通常壁面相當粗糙，殘留泥砂泥土甚多。 ➢ 高壓水沖洗作業易草率，造成樁內壁面摩擦力降低。 ➢ 影響樁頭處理混凝土品質及錨錠鋼筋之錨定力。
3.樁頭處理錨錠鋼筋植入	• 將 L 型鋼筋直接插入中空樁頭部位，大約均佈即可。	➢ 須將 L 型筋與螺旋箍筋於外部組立好，再一併插入中空樁頭部位。
4.樁頭處理混凝土澆置	• 普通混凝土 $f'c$=210kg/cm^2 (也可採用膨脹混凝土)	➢ 須澆置膨脹混凝土($f'c$=280kg/cm^2)。

第二代 DH-PHC 植入式基樁與傳統 PHC 基樁　成果比較：

成果	第二代 DH-PHC 植入式基樁	傳統 PHC 基樁
1.上部基礎與下部基樁間拉力傳遞品質	• 樁頭錨錠鋼筋之受力由工廠預置錨定於樁壁中的水平筋直接傳遞至樁體中，徹底發揮完美傳遞效果。 • 樁頭處理混凝土不會鬆脫。即使混凝土澆置品質略有差異，也不會造成力量傳遞的巨大差異。 • 使基樁抗拉拔力，完全發揮。	➢ 仰賴樁頭處理部位的膨脹混凝土與樁壁體間的摩擦力予以傳遞。 ➢ 會有老化、鬆脫現象發生 ➢ 特別是現場澆置混凝土之素質影響極大，易生設計所預想不到的情形。
2.下部基樁拉力傳遞量	• 使用樁頭水平筋 6 層 2X2 支 Type"L"的 D19 (fy=4,200kg/cm^2)，可輕易達到 486 Ton 的理論拉力(USD 法,Φ取 0.85)[註 1]，將遠超過所需的設計值。 • 若須更高拉力時，可採更大直徑、支數或更密間隔的樁頭水平筋。	➢ 低。僅為樁壁體與膨脹混凝土間的摩擦力傳遞。 ➢ 以樁外徑 600mm、內徑 400mm、樁頭處理 2m 深，採 2 kg/cm^2 的摩擦力[註 2]，約可承拉力 50 Ton (長期荷重)。
3.是否適合大拉力樁之設計	• 非常適合	➢ 不適合，如高壓構架。
4.是否適合大尺寸樁之設計	• 非常適合	➢ 視情況而定
5.是否有助於樁頭剪力承載	• 樁頭水平筋錨定於樁壁混凝土中，可增加樁頭剪力。	➢ 無

[註 1] 樁頭處理的樁芯承拉力= $(As_1*N$ 支*2 端點$)*Fy*Φ$
[註 2] 王元清等，PHC 基樁孔壁與澆置之普通混凝土間容許摩擦應力設計案例探討，2007，台灣。

▲圖 1-2-1：第 2 代 DH 快速樁[3]

▲Fig. 1-2-2: The 2nd generation DH quick pile factory group pile head horizontal rib

▲Fig. 1-2-3: The horizontal rib (2X2-D19, double L-type) of the pile head after concrete casting of the 2nd generation DH quick pile is embedded into the pile wall

▲Fig. 1-2-4: Assembly of the pile head venting holes of the 2nd generation DH quick pile (this case is organized at the construction site)

1.3 DH quick pile prefabrication test harvest

To be honest, a new engineering technology or product comes from the imagination, the shape, the design drawing correction, the factory test, it takes a lot of time and effort. The cost is

due to the small amount of trial work and the small amount, and it will not be troubled for the time being. Everyone knows that R&D is a crazy act of burning money, and we are also trying to restrain ourselves.

The volume of the pile body is quite large, and in the case(full scale) of test, the base pile of a normal size is made quite large. Because we don't do the traditional pile load test, we don't have to spend too much cost (prefabricated and planted piles), so we only made 10ML long. The pile we made this time is:

(1) 1st generation pile, 2-Φ500mmX12ML PHC (CNS 2602 Type-C), with DH technology (produced in 2011);

(2) (2) 2nd generation pile, 5-Φ600mmX10ML PHC (CNS 2602 Type-C), including DH technology.

Of course, the shape and the amount of steel bars are the same as those of the traditional piles. However, some connectors still need to add our own technology.

After experiencing the pre-production test process of the 1st and 2nd generation products mentioned above, the research and development points will be gradually implemented into the production line of the factory through the design, calculation and drawing on the drawings. When you see the product coming out, you can't say it; but if you see the missing or missing product, you can only go back and modify it. These journeys have also allowed our product models to be fully established, and we are more confident in the third generation of practical applications.

二、the piling construction of DH quick pile

PC/PHC piles can be divided into two main processes: factory prefabrication and site piling in civil engineering. We completed the prefabrication of the 1st and 2nd generation piles of the DH quick piles, and obtained some necessary parameters and corrections (much like playing war). After all, it is necessary to carry out piling in site to get the evidence of the construction.

In fact, for us at the time, the DH quick pile was a brand new pile. In some parts, we also made unclear functions (including advantages and disadvantages), and we could only cross the river by feeling the stones.

2.1 Piling construction of DH quick pile

It's really not easy. We can find a school landon the university campus that is willing to let us conduct field experiments. It is worth giving a round of applause.

2.1.1 DH quick pile piling plan (campus)

Although school and professors have the heart to assist us in the experiment, there is limited space in the school. We can only assign it to the corner of the school wall next to the Civil Engineering Museum (see Fig. 2-1-1). We also planned a plan for the location of the piles for the current piling construction of the experiment in this case (see Fig. 2-1-2). These 5-piles of the 2nd

generation and 2-piles of the 1st generation are also implanted at the outer periphery.

▲Fig. 2-1-1: Wall-to-wall land for piling and test piles

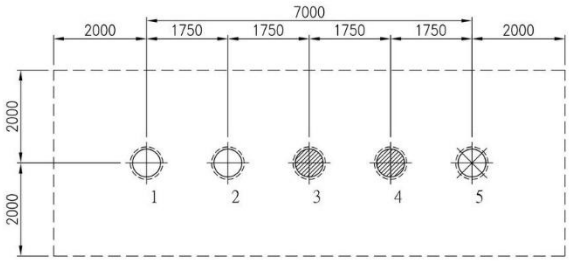

樁位平面圖
SCALE=NONE

附註:
1. 除非特別註明外,所有尺寸均爲 mm.
2. 基樁:

符號	樁蕊尺寸	數量	基樁編號	樁頂高程	說明
	600⌀x10mL 植入式預力基樁	2	#1,#2	GL.+200	PH-DHC 新式基樁 (水平加強筋爲 D16)
	600⌀x10mL 植入式預力基樁	2	#3,#4	GL.+200	PH-DHC 新式基樁 (水平加強筋爲 D19)
	600⌀x10mL 植入式預力基樁	1	#5	GL.+200	PH-DHC 新式基樁 (水平加強筋爲D16全長佈置)

▲Fig. 2-1-2: Planned position of piling

2.1.2 DH quick pile transportation to the construction site (campus)

The piling work was carried out because the land allocated to the test by the school was quite small, and the location was close to the wall next to the civil building, which was a bit crowded and surrounded by buildings and tall trees. The day (2014-01-18), the prefabricated DH pile was transported to the school by cart.

DEHA 德翰 智慧科技

▲Fig. 2-1-3: DH piles are transported to the side of the civil engineering department on campus.

2.1.3 DH quick pile construction

includes: strange hand modified drilling and excavating machine, crane, strange hand, cement slurry mixing and pumping machine. Cement is bulk cement that uses space packaging; because the quantity is not large and the pressure load test is not the main, the demand for cement is not large, so the bulk cement tank is not used in this case (that would make the work in the campus more annoying). The general standard drilling machine is quite tall, but this case is only 10ML because of our pile, not long, single-segment pile, no pile connection, and the working time is not long (including start-up), so the main equipment is modified by strange hands. Drilling machine (see Fig. 2-1-4 to Fig. 2-1-7).

The location of the campus is a bit narrow, and there are many trees around (these are not damaged), which is quite difficult to construct. Fortunately, there are only 7 small piles in this case, which can still be disposed of.

DEHA 智慧科技

▲Fig. 2-1-4: Strange hand-modified pile driver and drill bit, etc.

▲Fig. 2-1-5: The strange hand pile driver begins to drill the pile hole

DEHAN 德翰 智慧科技

▲Fig. 2-1-6: Hanging pile into the pile hole

(Note: The bottom left figure shows that the cement slurry is ejected from the vent hole at the top of the pile. This is the first time the world has been implemented and photographed.)

▲Fig. 2-1-7: Hanging pile into pile hole, measuring and determining pile top elevation (Note: On the right, the pile head is protruding from the ground, because this case is for testing purposes only, no need to dig)

2.2 The curing word of DH quick pile

Although we have shortened the construction period of the DH quick pile in the later stage,

we have not fully grasped many properties in this stage of research and development. Therefore, the "curing" after piling still follows the traditional method of piling. If you want to keep the pile for at least 28 days, the next process will be carried out: test. See Fig. 2-2-1.

▲Fig. 2-2-1: After piling, the pile is statically placed, usually 28 days.

2.3 The opening of top cover-plate of Dhquick pile

On 2018-01-27 (the 8th day after planting), based on curiosity and uneasiness, we went to the campus to open the top cover-plate of one of the piles to determine the pile head condition. Fortunately, the situation is good. Verify the true existence of the “hollow pile head” in the design of the DH pile (see Fig. 2-3-1). (Note: This is the first field piling of DH quick pile)

▲Fig. 2-3-1: 8 days after piling, we open a cover and look at the situation.

At 2018-02-08 (the 20th day after piling), we opened all the top cover-plates of the pile heads. The hollow pile head is in good condition.

"Opening the top cover-plate of the pile head" is a unique feature of the DH quick pile. This

time we use the simplest "manpower + pickpocket" to open the cover (Note: in future real cases, we sometimes use pneumatic pickpockets to open the cover to save time). This process is only a small movement at the pile head. Open the 5-6 festen bolts (M24) of the upper cover and disengage the upper cover from the top of the pile. This opening operation does not have any force on the pile body, and it does not affect the hardening of the cement slurry in the pile hole.

Basically, the action of "opening the top cover" reflects:

(1) The opening operation does not have any force to the pile body. There is no mechanical and safety impact on the hardening of the cement slurry in the pile hole. This action is also quite easy, and the manpower and tools are extremely simple.

(2) The early opening of the opening operation can produce the positive effect of the "compression period" on the overall construction process, without the need to make the construction period waste, and will not let the work class idle, or find the manpower when it is used. Or contact the subcontractors. More importantly, the construction period compression is conducive to engineering and capital operation.

(3) The design of the "hollow pile head" is achievable. In addition to the exposure of the horizontal reinforcement of the pile head (to facilitate the subsequent vertical anchoring reinforcement construction), the hollow pile head is the main design of the rapid compression period. The existence of the hollow pile head is determined, which is extremely advantageous for the rapid construction of the pile in the future. Even so, we have developed quicker construction methods such as "ultra-quick construction" and "super-quick construction". It is said that after 24-Hours or even 10 minutes after piling, it is possible to continue the construction of the latter process, which is extremely fun. And because of the rapid construction of these highly compressed schedules, we have developed many additional advantages. Interested friends, come and study.

(4) The opening of the cover is related to the success or failure of the "hollow pile head". This case is only an experimental pile. The top of the pile has an elevated elevation and is slightly different from the actual construction. In the yield of this "hollow pile head", we have spent a lot of effort in the development of the next two years to make it more complete. It is indeed quite satisfactory on the 3.5th generation pile.

德翰 DEHAN 智慧科技

▲Fig. 2-3-2: 20 days after piling, fully open the cover
(Note: drooping lighting is used to assist in photographing)

In practice, we can know that the cement slurry and soil mixture in the pile hole have not hardened for several days after piling (usually 28 days), there is no way to form friction against the pile body. And the support force of the pile bottom, this is correct. However, in practice, the standard two-segment of piles (such as the common 24 ~ 28ML), after a certain period of time after the pile is set (usually 5 minutes), the surrounding soil will gradually clamp the pile body (generating power), Forming a grip, the force may be as high as 50 tons (depending on the pile diameter, pile length, and soil quality), and even the construction crane can no longer be pulled up. Therefore, when constructing piles, the crane drivers are quite sensitive when the piles are placed in the pile holes. If you are not careful, they will become "card piles"; instead of planting one pile (repairing piles), you have to Inviting people to intercept the piles, but also to report to the design unit for approval, cost/time are counted as the piling subcontractor.

Finish the piling work, then? During this time, what to do? The construction site is clean, all workers rest, and wait 28 days (usually wait until 45 to 60 days), everyone will continue to work.

For construction contractors, the construction period is very very important. Why should we wait for such a long time? After the piling finished, there is still a lot of work to be done on the site. These tasks are very light, such as: soil preparation, stakeout, PC bottoming, pile head treatment,

form work of the bottom structure, steel banding, and even concrete work. The pouring operation (as long as it is not too high, such as the bottom layer, or the first floor, the pile should be completed when filling), the original soil compaction, and even the floor pavement can be carried out, which will not affect the deep pile bearing capacity. When the ground layer is completed, the cement grouting of the pile hole is almost the same, and other processes can be carried out. The construction period is compressed, the work class is not idle, and the inter-plant interface is reduced, which is the main reason. This is also the main reason for the improvement of the DH quick pile later.

The DH quick pile's compression capacity of the period is not from the DH quick pile itself (including factory prefabrication and site planting), but from "compressing other types of work/subcontractors, including waiting for floating time", urging the follow-up work to follow up quickly. In order to achieve the goal of "overall rapid construction", this is a very important concept in the construction management of construction projects.

More importantly, we found in the later period that this "construction period compression" is more important to the "owners", especially the efficient private owners. Mainly in the "capital investment and recycling speed considerations", this exceeds our original improved design concept for the DH pile, but it is unintentional.

3. The test work of Dhquick pile

The test of PC/PHC piles can be divided into two categories: factory inspection and site test. The factory inspection is pre-exit test in the pile factory. Most of the pile factories have TAF-certified laboratories for relevant tests, such as pile bending resistance. Most of the manufacturers issue reports to complete the inspection procedures. Public institutions or a handful of private owners sometimes have more stringent requirements for the pile body to be broken to determine the number of steel bars in the pile.

Most of the site tests are pile load tests (compression, tensile, shear) to determine whether the allowable load values of the piles are qualified or not, mainly related to soil geological changes (test geological drilling accuracy), which is prefabricated piles. The most important test.

The DH quick pile test project of this case considers that the material strength of the DH quick pile is the same as that of the traditional PC/PHC pile, and there is no change in the shape of the pile, which will not affect the bearing capacity of the pile (Including three aspects of vertical bearing, tensile and shearing, it is not used for the traditional pile load test (if repeated, it is boring). The test project is mainly for the "pile head pull-up test" formed by the special "hollow pile head" of the DH quick pile and its preset "pile head horizontal reinforcement".

3.1 Pile head treatment of DH quick pile

Originally, the pile head treatment of the PC/PHC piles was part of the construction process to connect the PC/PHC piles below and the base structure (the caps) above. However, this case is not

an actual construction case. It is only used for the "pile head pull-out test" and is used for piling. In order to cooperate with the test, many test sensors and instruments must be installed, so the pile head treatment is moved to this section.

The DH quick pile is created to improve the lack of the pile head treatment process of the traditional PC/PHC pile. Basically, it is a safer and stronger improvement measure.

Multi-layer and multi-sets of pile-level horizontal steel bars are preset at the hollow pile head of the DH quick pile. After the vertical anchoring steel bars and spiral stirrups in the pile head treatment process are assembled, they are poured together with the core-filled concrete. carry out.

Because it is necessary to make the "pile head pull-out test", it must rely on the vertical anchoring steel as the medium of tensile force. Therefore, it is necessary to attach the sensor (strain gauge) and conduct in advance (before pouring the concrete) on the vertical anchoring steel. Line so that the force data can be read. The test equipment of this case was assisted by the well-known Sanlian Technology Company. The engineers spent some time on the adhesion of the sensor (see Fig. 3-3-1). The pouring of the remaining pile-filled concrete was also completed in the afternoon, but it was simple work, using 210 kg/cm^2 (about 3,000 psi) of ordinary ready-mixed concrete without adding micro-expansion agent. In practice, we recommend that the strength of the core-filled concrete should be the same as that of the concrete used on the foundation cap above.

In 2018-04-10, the pre-guided pile head treatment and strain gauges and other instrument wiring measures were implemented. Limited to the budget, the trial in this case is only for one pile. The designated test pile is Φ600mmX12ML Type-C PHC, and the preset pile head horizontal reinforcement is used: 6-layers 2X2-D19 (SD42) reinforcement. For vertical anchoring reinforcement: 8-D36 (SD42W) reinforcement (prepared to withstand more than 400 tons of tensile force).

In Fig. 3-1-1, it is the estimated time-schedule for the current year. In the case of a simple pile test, it is quite complicated. The actual implementation schedule and projects have changed a bit, but without affecting the narrative of this article, there will be no more words.

德翰 DEHAN 智慧科技

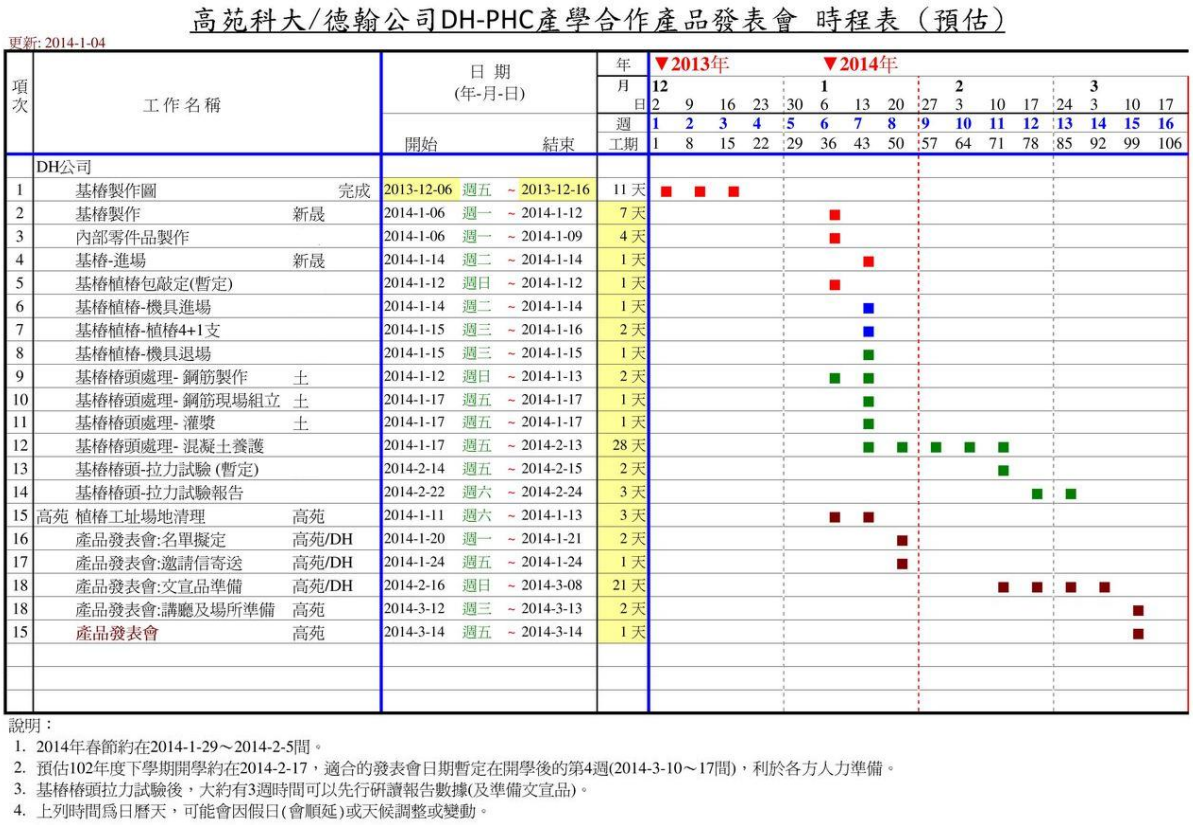

高苑科大/德翰公司DH-PHC產學合作產品發表會 時程表（預估）

更新: 2014-1-04

項次	工作名稱		日期 (年-月-日) 開始		結束	工期
	DH公司					
1	基樁製作圖	完成	2013-12-06	週五	~ 2013-12-16	11 天
2	基樁製作	新晟	2014-1-06	週一	~ 2014-1-12	7 天
3	內部零件品製作		2014-1-06	週一	~ 2014-1-09	4 天
4	基樁-進場	新晟	2014-1-14	週二	~ 2014-1-14	1 天
5	基樁植樁包敲定(暫定)		2014-1-12	週日	~ 2014-1-12	1 天
6	基樁植樁-機具進場		2014-1-14	週二	~ 2014-1-14	1 天
7	基樁植樁-植樁4+1支		2014-1-15	週三	~ 2014-1-16	2 天
8	基樁植樁-機具退場		2014-1-15	週三	~ 2014-1-15	1 天
9	基樁樁頭處理- 鋼筋製作	土	2014-1-12	週日	~ 2014-1-13	2 天
10	基樁樁頭處理- 鋼筋現場組立	土	2014-1-17	週五	~ 2014-1-17	1 天
11	基樁樁頭處理- 灌漿	土	2014-1-17	週五	~ 2014-1-17	1 天
12	基樁樁頭處理- 混凝土養護		2014-1-17	週五	~ 2014-2-13	28 天
13	基樁樁頭-拉力試驗 (暫定)		2014-2-14	週五	~ 2014-2-15	2 天
14	基樁樁頭-拉力試驗報告		2014-2-22	週六	~ 2014-2-24	3 天
15	高苑 植樁工址場地清理	高苑	2014-1-11	週六	~ 2014-1-13	3 天
16	產品發表會:名單擬定	高苑/DH	2014-1-20	週一	~ 2014-1-21	2 天
17	產品發表會:邀請信寄送	高苑/DH	2014-1-24	週五	~ 2014-1-24	1 天
18	產品發表會:文宣品準備	高苑/DH	2014-2-16	週日	~ 2014-3-08	21 天
18	產品發表會:講廳及場所準備	高苑	2014-3-12	週三	~ 2014-3-13	2 天
15	產品發表會	高苑	2014-3-14	週五	~ 2014-3-14	1 天

說明：
1. 2014年春節約在2014-1-29～2014-2-5間。
2. 預估102年度下學期開學約在2014-2-17，適合的發表會日期暫定在開學後的第4週(2014-3-10～17間)，利於各方人力準備。
3. 基樁樁頭拉力試驗後，大約有3週時間可以先行研讀報告數據(及準備文宣品)。
4. 上列時間為日曆天，可能會因假日(會順延)或天候調整或變動。

▲Fig. 3-1-1: Estimated schedule of pile head pull-out force test

3.2 DH quick pile pile head pull-out test plan

The horizontal reinforcements used in this case are: 6-layers 2X2-D19 (SD42) L-type reinforcement, a total of 24 steel bars, with 48 end points (embedded into the pile wall). (See Fig. 3-2-5)

- The horizontal rib sectional area of the 48-embedded point = 48*(π/4*1.92)=136.09 cm^2,
- Will withstand shear (vertical) = 136.09 cm^2*4,200 kg/cm^2 /1,000 = 571.5 tons
- Therefore, the case is designed to: challenge the pile head tensile force of 400 tons.

The pile head anchored steel used in this case: 12-D36 (SD42W) reinforcement. (See Fig. 3-2-4)

- Estimated pull force is 12*(π/4*3.62)*4,200 kg/cm^2 /1,000 = 513 tons
- Therefore, the case is designed to: challenge the pile head tensile force of 400 tons.

The pile head pull-out force test of pre-stressed piles is a relatively small-scale test project in engineering, but it has still been implemented and discussed locally [4] [5]. The reason why it is rarely implemented, the reason may be that the test conditions are far from the on-site construction conditions, and the test data is not highly adjuvant. According to the actual construction of the pile-pile construction manufacturer, basically, the tensile strength of the core-filled concrete of the pile hole at the pile head treatment site of the pile is measured, and the general "secondary core clearing hole" work quality is generally The control is below 20 tons; if it

exceeds 20 tons, the pile carrier can usually not guarantee that the core can pass the test. On the other hand, the piles are generally used as "pressure piles". There are fewer "tension piles" and the designers will not deliberately design them as tension piles. But how can you limit yourself so much? In the real construction and use of buildings, what kind of accidents do you know? In the 2009 Shanghai Building incident, the accident was not "unexpected"? [7]

In Fig. 3-2-1, it can be seen that this is a pile designed for "testing". The symptom is that the pile head obviously floats out of the ground surface (the pile top elevation of the general pile foundation is about GL.-1.5M below the surface, to meet the elevation required for the subsequent foundation caps, the floating holes of the cement mortar are not present in the bore of the pile (the inner hole is obviously clean), and the artificial high-pressure water cleaning is also obvious. (Fig. 3-2-1 left). This makes the inner hole surface of the pile quite clean, and also makes the pile head pull-out test carried out in the latter stage can completely break the core-filled concrete section of the pile head (Fig. 3-2-1 right), so that the core-filled concrete It has been able to play to the fullest.

▲Fig. 3-2-1: High-pressure water cleaning pile hole for pile head pull-out force test (left), pull-out damage (right) [4]

Because it is a test pile [4], the real situation is very different from the construction site. In Fig. 3-2-2 and Fig. 3-2-3, the operation of the "secondary core clearing" process in the front section of the pile head treatment of the local general prestressed pile is currently carried out. In fact, this weakness is the most original improvement motivation of the DH quick pile (multiple improvements, but later it is not the keypoint).

When we saw the "pile head treatment" of the traditional PC/PHC piles after piling on the construction site, the "secondary core clearing" process was used, and a large machine was used to drill a hole of about 2M depth directly on the pile head. (Fig. 3-2-2), the cement slurry in the inner hole is mixed and the sand is hard but not properly removed (it is also difficult to completely remove it) (Fig. 3-2-3), then the anchor steel cage put into the pile head is refilled with "expanded concrete" to become cored concrete. The expanded concrete used as the core of the pile head is used to make the cored concrete in the inner hole of the pile head expand slightly after drying and

hard to "support" the PC/PHC pile wall concrete, and generate friction to resist the upper structure. The upward pull that is transmitted. However, the construction of piles in Taiwan's construction sites has been subdivided into sub-contracts. The small subcontractors of these "secondary core clearing" processes have low profit margins, and it is impossible to clean the inner holes of the pile heads again with high-pressure water jets. To ensure the durability of the friction of the inner hole), it is only required to use a higher pressure water (non-water knife) for a little flushing (some even high-pressure water washing is not applied), which is only able to slightly smear the mud Clearly, the completion of the work (Fig. 3-2-3), resulting in the pile cap concrete section of the tensile strength of the loss or failure, seriously deviated from the design engineer's ideal assumptions. [6]

▲Fig. 3-2-2: Traditional piling: secondary core processing and machine tools [6]

▲Fig. 3-2-3: Traditional piling: the inner wall of the pile after the core is cleaned [6]

It should be pointed out in particular: in this case test, because the test project is "pile head pull-out force", it has nothing to do with the pile load. Therefore, we also choose the "pile head to protrude the ground" for the test. Actual site construction. Because if the actual construction situation according to the construction site will cause a lot of excavation work on site (more cost and time), there will be some disorder in the campus; and the pile head pull-out force test only uses the pile head part, and does not need to go below the ground. jobs. When the funds and the land are sufficient, more detailed tests will be carried out, which will be more timely and appropriate.

Although the results of the test instrument are implemented, the final pull-out force data can be known. However, in the experimental design, we still use the most traditional pre-embedded strain gauge method to observe the force transmission of the core-filled concrete section (2M deep) when the pile head pull-out force is implemented (see Fig. 3-2-4). Because the main body of the experiment is preset to the horizontal reinforcement of the pile head (see Fig. 3-2-5), it needs to be observed.

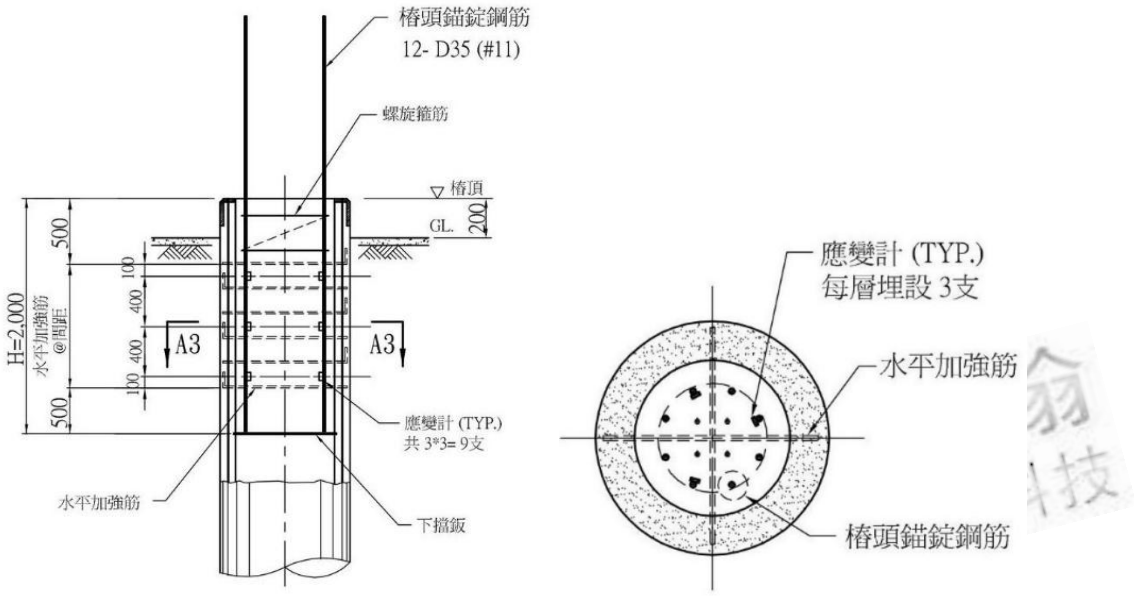

▲Fig. 3-2-4: Schematic diagram of the embedding position of the strain gauge for DH pile head pull-out test

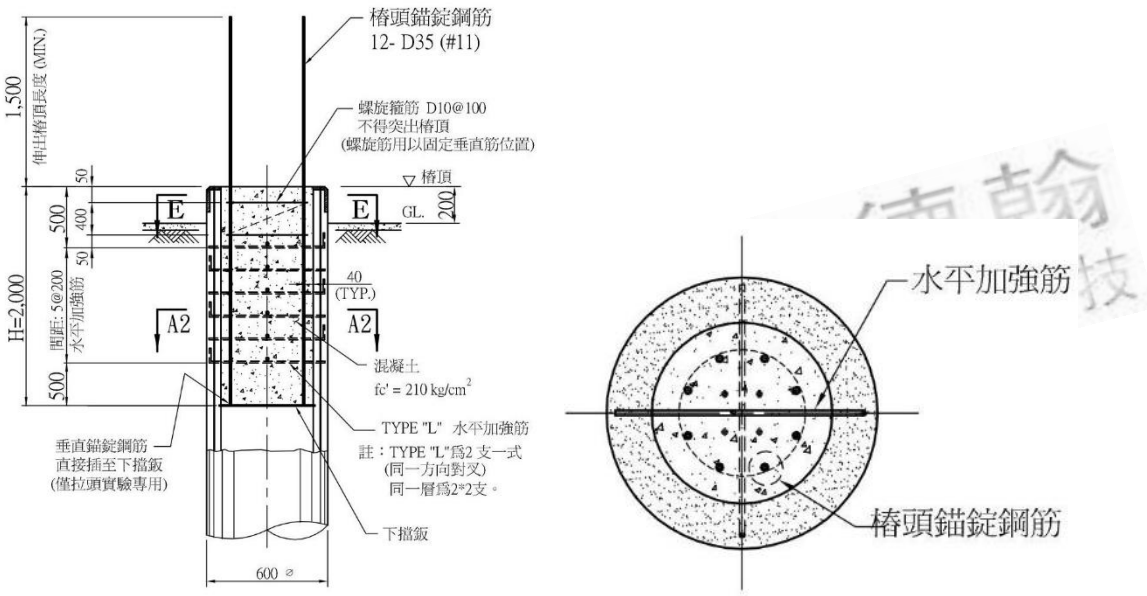

▲Fig. 3-2-5: Schematic diagram of the horizontal reinforcement of the pile head in the DH pile head pull-out test

3.3 Pile head treatment of DH quick pile

Before the test, we still have to complete the last part of the "pile head treatment" process: steel cages and cast concrete to bridge the follow-up work. This work was carried out on 2014-04-10.

In the traditional "pile head treatment", the steel cage (which has been assembled) is simply placed in the inner hole of the pile, and concrete (generally expanded concrete, that is, concrete with a micro-expansion agent added) is poured. However, due to the implementation of the test, it is necessary to embed strain gauges and other objects, so it is slightly more complicated.

3.3.1 Embedding of strain gauges

Together with the subsequent test implementation, this is a professional job, and it depends on the professional company to deal with it, not the school level.

▲Fig. 3-3-1: Strain gauge preset for DH pile head pull-out test

3.3.2 Vertically anchored steel and cored concrete casting

After the strain gauge is preset (adhered to the vertical anchoring bar), the vent pipe (PVCP) is removed, the anchoring bar is placed in the bore of the pile, and the concrete is poured. It is worth noting that the concrete used in this case is fc'=210 kg/cm^2 ordinary concrete, and no micro-expansion agent is added because the DH quick pile does not depend on the friction between the core-filled concrete and the inner wall of the pile.

▲Fig. 3-3-2: Anchored steel and core-filled concrete casting for DH pile head pull-out test

3.4 DH quick pile pile head pull-out test execution

After the pile-filled core is hardened, the "pile head pull-out test" is carried out at 2018-05-26. The design of the pile head pull-out test in this case has a tensile strength of 400 tons; it has also been asked about the contractor's experience in the application. It is reported that the 400 tons pile head pull-out test is carried out without problems.

In this case, the pile head anti-pull test was commissioned by Yantong Engineering Co., Ltd. (including the geotechnical visa report). Early in the morning, the staff came to the campus site to start work, mainly the installation of the pile head tensile test equipment and the fixing mechanism of the machine (see Fig. 3-4-1).

▲Fig. 3-4-1: Implementation of DH pile head pull-out test

3.5 DH quick pile pile head tensile test results

The force applied to the pile head pull-out test is 25 tons as a test interval, and the test force is gradually adjusted upwards. In this case, up to 195 tons (in the range of 175-200 tons), the vertical anchoring steel bars fractured above the pile top (the steel bars below the pile top were not pulled out or pulled, and the concrete was also intact), and no further force could be applied. The trial is terminated. (See Fig. 3-5-1)

The upper pull-off results of the steel bars in this test are different from the steel pull-out and concrete failure of the conventional pull test (see Fig. 3-2-1 right). The failure of Fig. 3-2-1 is mainly caused by the core-filled concrete in the pile hole being pulled or broken, that is, the friction between the core-filled concrete (using expanded concrete) and the wall surface of the pile hole is broken and caused to be pulled or broken. This result, in the 2009 Shanghai building down event, can also get a part of the evidence: the friction of the core-filled concrete in the pile is unstable, may be lost or worn when subjected to tension, and the risk will be occured [7].

In the case (Fig. 3-5-1), the upper part of the steel bar is broken. In our case, it is speculated that the possible reason is the preparation of the front part of the experiment, which may be improper in welding or uneven distribution of the connecting members. When the tension was 195 tons, 2-D36 bars of 12 were broken due to uneven force. The core-filled concrete below the pile top and the preset horizontal reinforcement of the pile head have not been damaged, which proves that the horizontal reinforcement embedded in the pile wall really play a role, which is enough to replace the core filling treatment of the traditional expanded concrete. This is an empirical demonstration of important mechanical improvements on DH quick pile components.

▲Fig. 3-5-1: Results of the DH pile head pull-out test - 2 of the steel bar of the upper part are broken, and the section of the broken part is clear and tidy

What is particularly interesting is that during the implementation of this experiment, the school's civil engineering department also held a teaching model, so that the young students in the civil engineering department also came to see the pile test work (see Fig. 3-5-2). At the time, these young people did not know that they personally participated in the world's first DH quick pile test.

▲Fig. 3-5-2: Coordinating with the school's teaching model

In 2014-05-09, the product was published in cooperation with the school's industry-university cooperation. (See Fig. 3-5-3 and Fig. 3-5-4)

▲Fig. 3-5-3: Cooperating with the school's industry-university cooperation product

▲Fig. 3-5-4: Handouts of the school's industry-university cooperation products [9]

Of course, the contractor must finally write a test report [8] to us (see Fig. 3-5-4).

In the least of the test report [8], the case of the steel bar above the pile top was broken. This result is in fact significantly different from the design estimates we tested. We expect to pull

or pull out around 400 tons, but only reach half the expected strength (195 tons). The standard piles are generally used as pressure piles and are rarely used as tension piles. Moreover, the average pile head tension is only 20 tons at most. The 195 tons of the test results in this case are not satisfactory, but they are also acceptable. The chances of using such high tensile capacity in the case are not high. When the case was going on, many details were still unclear, and the experimental design was not complete enough. We thought it was not delicate enough; in the future, we had the opportunity to re-test.

Secondly, the prefabrication of the DH quick piles and the construction of the site have generally been carried out in a way that “reducing the amount of construction work and minimizing the impact of quality variation on the construction site”, including the construction site “seconary core drilling hole”. The quality of the work class (replaced by the hollow pile head), the quality of the expanded concrete filled with core (replace the function of the horizontal reinforcement of the pile head and ordinary concrete), and try to maintain the quality of all DH piles. Therefore, the test results of this case have provided a strong reference for design.

The horizontal reinforcement of the pile head are made of ordinary reinforcement. In the general depth of the 2M pile head, the design of 6-layers - 2 pieces (or 2X2 pieces) is quite easy to assemble and also provides sufficient tensile strength. capacity. When we use a larger pile diameter or a longer pile, it is bound to use a deeper pile head treatment depth, such as 3M or more, then we can use more layers of pile head horizontal reinforcement (for example, 12 layers - 2X2) Support or 2X4, etc., or larger diameter bamboo reinforcement (such as D19, D22, D25, etc.) to improve the tensile strength. This will meet the requirements of the design engineer.

The breakthrough of this point of view also makes us understand that prefabricated piles (PC/PHC piles) can be used in better applications, such as challenging the dominance of full casing piles, etc., and we will practice them in the later stages of research and development.

德翰 DEHAN 智慧科技

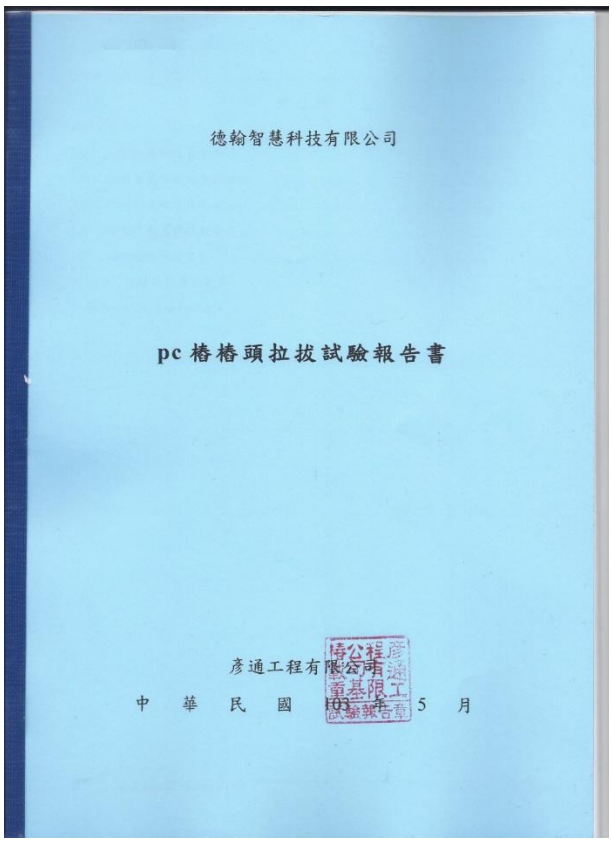

德翰智慧科技有限公司

pc 樁樁頭拉拔試驗報告書

彥通工程有限公司

中 華 民 國 103 年 5 月

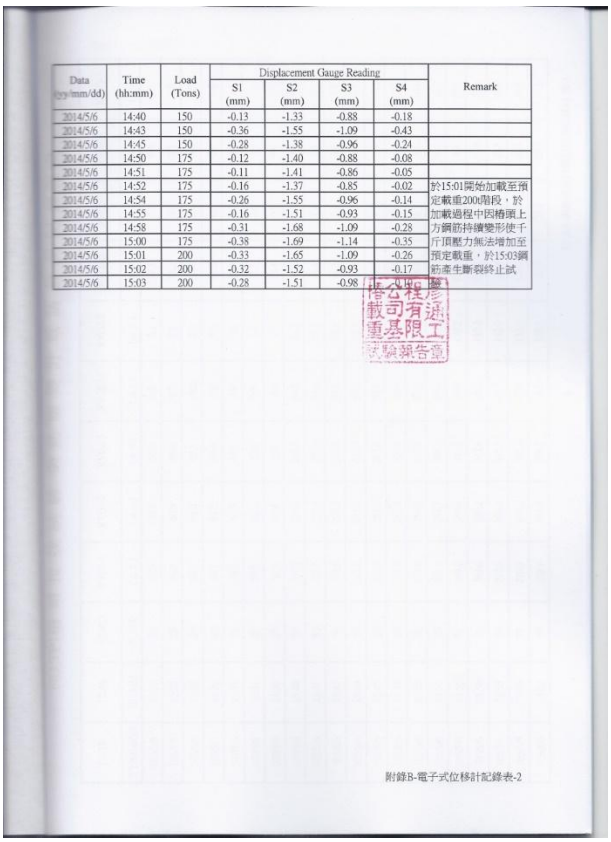

Data (yy/mm/dd)	Time (hh:mm)	Load (Tons)	Displacement Gauge Reading S1 (mm)	S2 (mm)	S3 (mm)	S4 (mm)	Remark
2014/5/6	14:40	150	-0.13	-1.33	-0.88	-0.18	
2014/5/6	14:43	150	-0.36	-1.55	-1.09	-0.43	
2014/5/6	14:45	150	-0.28	-1.38	-0.96	-0.24	
2014/5/6	14:50	175	-0.12	-1.40	-0.88	-0.08	
2014/5/6	14:51	175	-0.11	-1.41	-0.86	-0.05	
2014/5/6	14:52	175	-0.16	-1.37	-0.85	-0.02	於15:01開始加載至預
2014/5/6	14:54	175	-0.26	-1.55	-0.96	-0.14	定載重200t階段，於
2014/5/6	14:55	175	-0.16	-1.51	-0.93	-0.15	加載過程中因樁頭上
2014/5/6	14:58	175	-0.31	-1.68	-1.09	-0.28	力鋼筋持續變形使千
2014/5/6	15:00	175	-0.38	-1.69	-1.14	-0.35	斤頂壓力無法增加至
2014/5/6	15:01	200	-0.33	-1.65	-1.09	-0.26	預定載重，於15:03鋼
2014/5/6	15:02	200	-0.32	-1.52	-0.93	-0.17	筋產生斷裂終止試
2014/5/6	15:03	200	-0.28	-1.51	-0.98	-0.19	驗

附錄B-電子式位移計記錄表-2

▲Fig. 3-5-4: Test report on the pull-out force of the pile head of DH pile [8]

4. Conclusion

This article is mainly to commemorate the experiment of the year, and leave some records and memories, the style is not so academic, please do not care too much. The article also quotes a lot of photos, including campus photos, to increase reading, not too boring.

Every innovative product in the project is a result of the time spent by engineers. Of course, it is impossible to implement it immediately. Usually, it has to go through many processes of promotion, experimentation, and repeated argumentation. It is very hard. In particular, the "large-scale structural parts" such as foundation piles are hard to develop in the domestic engineering market in the recession.

In the pile head pull-out test of this case, although we have not been very satisfied, we also got a few points from it:

(1) The pile head preset horizontal rib of the DH quick pile does provide sufficient pile head pull-out force.

(2) The hollow pile head of the DH quick pile does exist during the pile construction.

DEHAN 德翰 智慧科技

Thank you:

This case is quite a time-consuming process. I would like to thank the Kao Yuan University for encouraging technological innovation and generously providing land in the corner of the campus to

assist in the implementation of this case. I would like to thank Professor Chang Jiaqi and Professor Liu Wenzong for their encouragement and rushing to make this case a success. Thanks to the assistance of Jieyang Engineering Company, Yantong Engineering Company and Sanlian Technology Company, this case has been able to clear the outline in a thousand ways.

Postscript:

After the completion of the case, Dehan also used other existing piles to carry out other test projects. The piles used in the experiment were stayed on the campus. The school has not destroyed them, and is barely called a civil scene. Many of the DH piles are called the industry's pioneering work. If young students or engineers are interested in research, they may wish to go to the side wall of the Civil Engineering Department of Kao Yuan University. The experimental pieces should still be visible. This may be the only local one. A school with physical pile teaching equipment. However, there may be some corrosion in the end or the steel bars.

References:

[1] Lee Shengnan (2010), “Investigation of implanted PC piles and feasibility of pile improvement”, Kao Yuan University, Kaohsiung City.

[2] Xinyi Cement Products Company, “Product Catalog”, Xinyi Cement Products Company, Tainan City.

[4] Wang Yuanjing, Kitazuki Koji, and Lin Zhenping (2007), “A case study on the design of the allowable wrap stress between the PFC pile wall and the cast concrete.” The 12th Earth Engineering Symposium Paper, Taiwan.

[5] Su Baijia (2008), “Discussion on the case of anchoring and holding stress of implanted piles”, Proceedings of the 9th Structural Engineering Symposium of the Republic of China, Kaohsiung City.

[6] Lee Shengnan (2016), “The development of DH quick piles and the application of rapid construction in the industrial sector”, Dehan Intellectual Technology Corporation official website (www.dehantech.com)

[7] Lee Shengnan (2014), “Improvement of pre-stressed pile head joints – taking the collapse of the Shanghai Building as an example”, Proceedings of the Asia-Pacific Urban Construction Practice Forum, Hong Kong University of Science and Technology, Hong Kong.

[8] Yantong Engineering Co., Ltd. (2014), "Dehan Wisdom Technology Co., Ltd. - PC pile head pull-up test report", Kaohsiung City.

[9] Chang Jiaqi (2014), “DH-PHC Pre-stressed Piles Technology Innovation Announcement”, Kao Yuan University /Dehan Intellectual Technology Co., Ltd. Industry-University Cooperation Product Presentation, Kaohsiung City.